CLOCHE

by Joan Genebat

eltorrent

Typology: Suspension

Description / Descripción

Hanging lamp made from treated cork and perforated metal sheet with antioxidant treatment (nanophoresis) and polyester paint, available in off white (RAL9001) and anthracite grey (RAL7024). Black fabric cable and bulb in the indoor version.

Luminaria de suspensión fabricada en corcho tratado y chapa metálica perforada con tratamiento antioxidante (nanoforesis) y pintura de poliéster, disponible en blanco roto (RAL9001) o gris antracita (RAL7024).
Cable textil negro y bombilla en la versión indoor.

General measures / Medidas generales

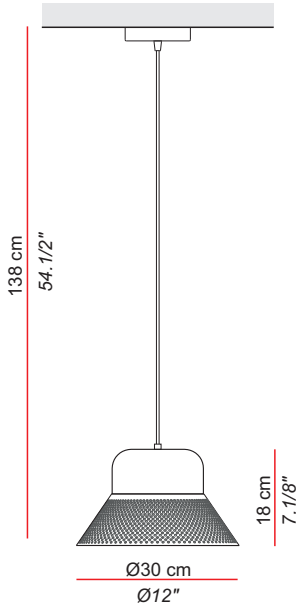

Light Source / *Fuente de luz*

Voltage: 220-230V / 50-60Hz
120V / 60Hz (USA)

European version

○ CH.001.00W
● CH.001.00G

A+

1xE27 LED 12W

USA version

○ TUS.CH.001.00W
● TUS.CH.001.00G

1x14W LED Medium base 120V

Bulb not included / Bombilla no incluida

Packaging / *Embalaje*

1 box

32x32x25 cm / 0,025 m³
13"x13"x10" / 0,89 ft³

Peso neto: 1,5 Kg
Net weight: 3,3 lb

Materials & Finishings / *Materiales y acabados*

Lampshade *Pantalla*	**Natural Cork / water-based varnish** *Corcho natural / Barniz al agua* *Finished: Clear matt varnish (water-based)* *Acabado: barniz mate incoloro (en base agua)* **Lacquered perforated metal sheet** *Chapa metalica perforada lacada* ○ **RAL 9001** ● **RAL 7024**
Canopy *Florón*	**Laquered metal** *Metal lacado* **(RAL 9001 / RAL 7024)*
Electrical cable *Cable eléctrico*	**Black fabric cable** *Cable textil negro*

Certifications:

CE IP20

650°

USA Certifications:

Intertek 4006546

DAMP Location

Light for indoor use only / Luminaria solo para uso interior

CLOCHE

by Joan Genebat

Outdoor

Typology: Suspension

Description / Descripción

Hanging lamp made from treated cork and perforated metal sheet with antioxidant treatment (nanophoresis) and polyester paint, available in off white (RAL9001) and anthracite grey (RAL7024). Neoprene cable and 10W LED module in the outdoor version

Luminaria de suspensión fabricada en corcho tratado y chapa metálica perforada con tratamiento antioxidante (nanoforesis) y pintura de poliéster, disponible en blanco roto (RAL9001) o gris antracita (RAL7024).
Cable neopreno y módulo LED 10W para versión outdoor.

General measures / Medidas generales

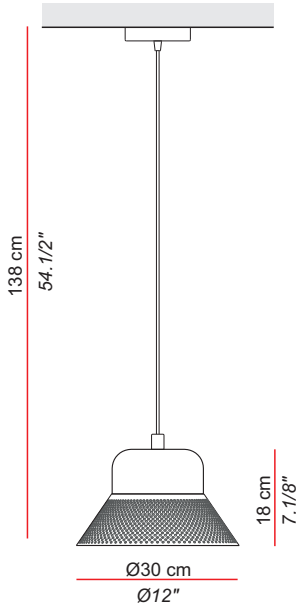

Light Source / *Fuente de luz*

Voltage: 220-230V / 50-60Hz
120V / 60Hz (USA)

European version

○ CH.101.14W ● CH.101.14G	A+	LED 10W 230V 2700K 850lm Dimmable TRIAC

USA version

○ TUS.CH.101.14W ● TUS.CH.101.14G	LED 10W 120V 2700K 850lm Dimmable TRIAC

LED module included / Módulo LED incluido

Packaging / *Embalaje*

1 box

32x32x25 cm / 0,025 m³
13"x13"x10" / 0,89 ft³

Peso neto: 1,5 Kg
Net weight: 3,3 lb

Materials & Finishings / *Materiales y acabados*

Lampshade *Pantalla*	**Natural Cork / water-based varnish** *Corcho natural / Barniz al agua* *Finished: Clear matt varnish (water-based)* *Acabado: barniz mate incoloro (en base agua)*
	Lacquered perforated metal sheet *Chapa metalica perforada lacada* ○ **RAL 9001** ● **RAL 7024**
Canopy *Florón*	**Laquered metal** *Metal lacado* **(RAL 9001 / RAL 7024)*
Electrical cable *Cable eléctrico*	**Black neoprene cable** *Cable neopreno negro*
Diffuser *Difusor*	**PMMA / matt ice** *PMMA / hielo mate*

Certifications: *USA Certifications:*

CE **IP54** 650° | Intertek 4006546 **Wet Location**

Suitable for outdoor use / Apta para uso exterior