CLOCHE

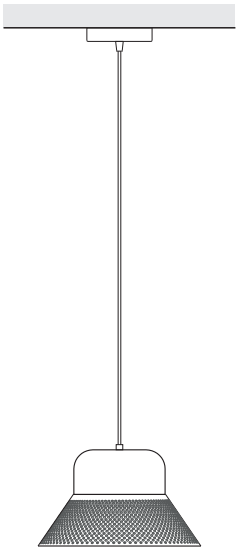

Assembly instructions
Instrucciones de montaje

EL TORRENT IL·LUMINACIÓ S.L.

C/ Curreró 8, 17830
Mieres (Girona) Spain

T. +34 972 680 291
F. +34 972 680 011
eltorrent@eltorrent.com

www.eltorrent.com

Light for outdoor use
Luminère pour usage extérieur

Tension d'entrée: 120V - 60Hz
Input voltage: 120V - 60Hz

TUS.CH.001.02	*1x13W / LED / Medium base / 120V*
TUS.CH.101.14	*LED 10W 120V 2700K 850lm* ***Dimmable TRIAC***

DAMP Location | CE | IP20 (CH.001) | IP54 (CH.101)

PRODUCT IS TO BE INSTALLED BY A QUALIFIED ELECTRICIAN ONLY

The safety of this fixture is only guaranteed if the following instructions have been observed.

EN

Always disconnect power before working on fixture.

Replacement bulbs must be of same type and wattage as specified in istructions.

Metal surfaces, glass or other parts of fixture may be cleaned with a soft damp cloth and mild detergent.

LE PRODUIT DOIT ÊTRE INSTALLÉ PAR UN ÉLECTRICIEN QUALIFIÉ UNIQUEMENT

La securite du montage est seulement garanti si vous avez respecter les instructions suivants.

FR

Avant de monter déconnecter le courant.

Les ampoules de remplacement doivent être de même type et la puissance en watts que spécifié dans des instructions.

Des surfaces métalliques, le verre ou d'autres parties peuvent être nettoyés avec un tissu humide doux et un détergent doux.

UL1598.

ELECTRICAL INSTRUCTIONS FOR FLUSHMOUNTS, WALL SCONCES , AND PENDANTS.

Save these instructions. Min 90c supply conductors.
Caution risk of fire. Use stated watt or smaller. Caution risk of shock. Disconnect power before servicing.

To reduce the risk of a burn during replacing, allow to the bulb to cool down. Allowed for damp locations.

This product must be installed in accordance with the applicable installation code.
by a person familiar with the construction and operation of the product and the hazard involved.
Warning: all wires and wire nuts used in the installation must be rated 195F(90C) for indoor use only these product must be installed by a qualified electrician.

UL8750.

ELECTRICAL INSTRUCTIONS FOR LAMPS WITH LED THECNOLOGI.

Save these instructions. Min 90c supply conductors.
Caution risk of fire. Use stated watt or smaller. Caution risk of shock. Disconnect power before servicing.

Isn't allowed to change or replace any of the components involved on this piece without the authorization and instructions from the manufacturer.
Allowed for damp locations. This product must be installed in accordance with the applicable installation code.
by a person familiar with the construction and operation of the product and the hazard involved.
Warning: all wires and wire nuts used in the installation must be rated 195F(90C) for indoor use only these product must be installed by a qualified electrician.

Intertek

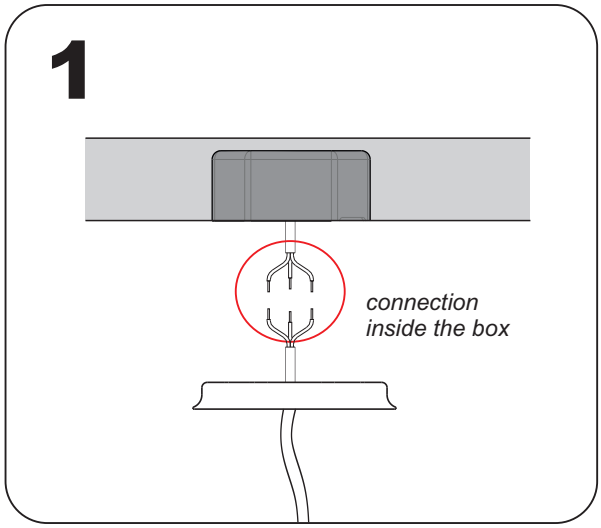
1
connection
inside the box

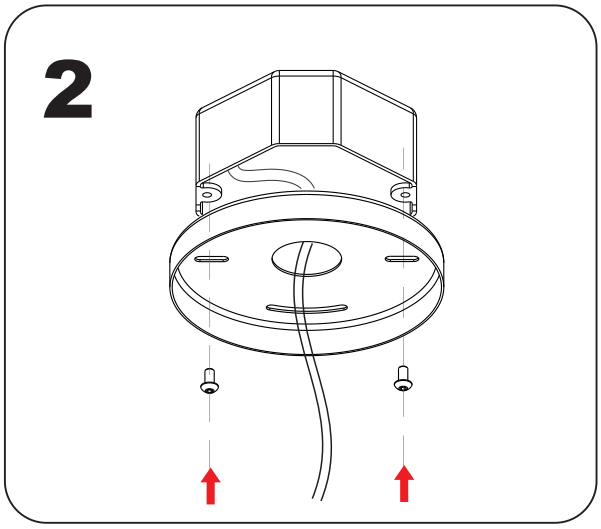
2

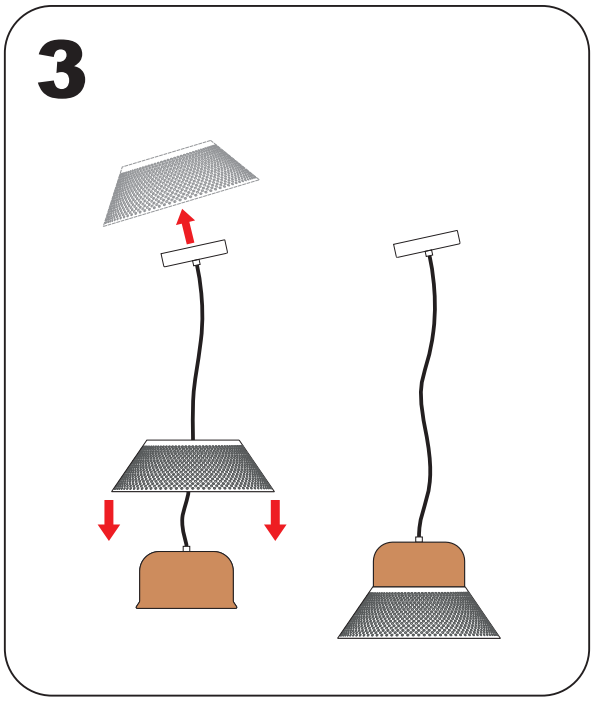
3

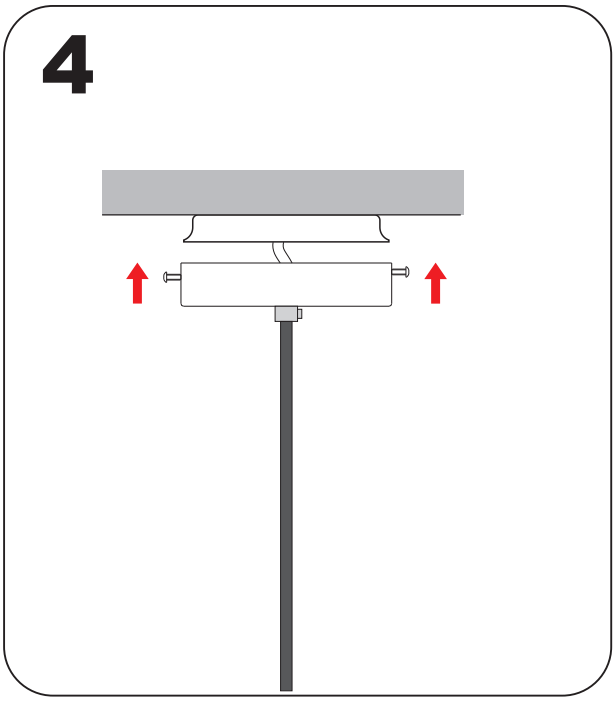
4

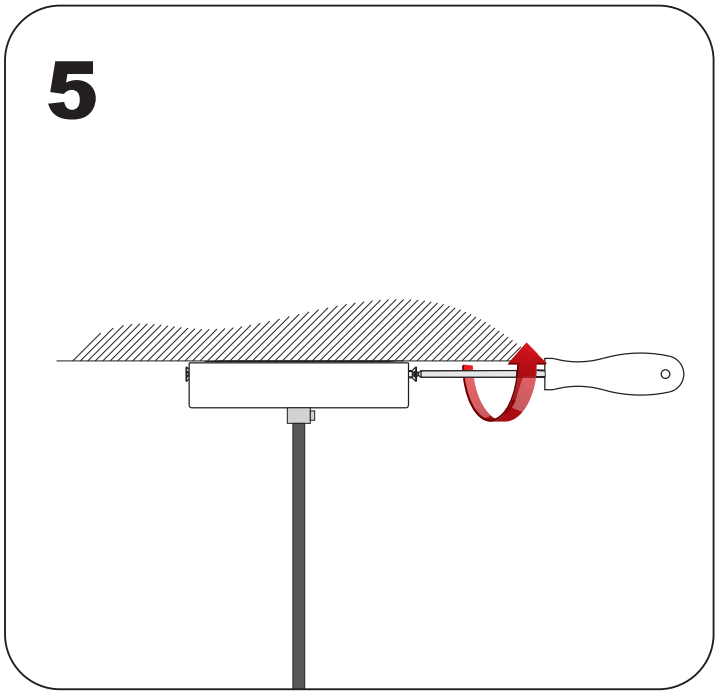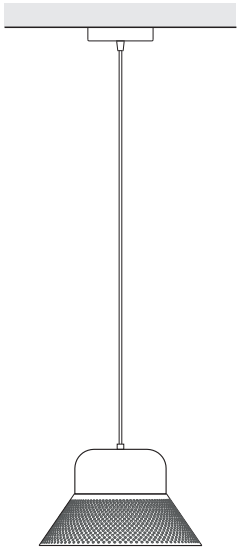
5